Arduino and sensors basics quiz, knowledge required

Hardware, including the IO ports/pins that are available on Arduino

Arduino UNO board (P3 of the review notes), CPU used is called ATmega328P

Clock frequency 16 MHz, directly affects the response time of this Arduino controller

Digital pins, 14, from 0 to 13

analog pins, 6, from A0 to A5

PWM, what is it, pulse width modulation

How many pins on Arduino UNO that are able to generate PWM signal, 6 pins, that are 3, 5, 6, 9, 10, 11

Basics of PWM (Pulse Width Modulation) | Arduino Documentation

10-bit ADC, analogue to digital convertor, what is the meaning of 10-bit?

The resolution of ADC is 2^(10) = 1024, range from 0 - 1023

Want to know more detail, ask GenAI with the prompt “what is 10-bits ADC in Arduino”.

Runtime variable is stored in SRAM.

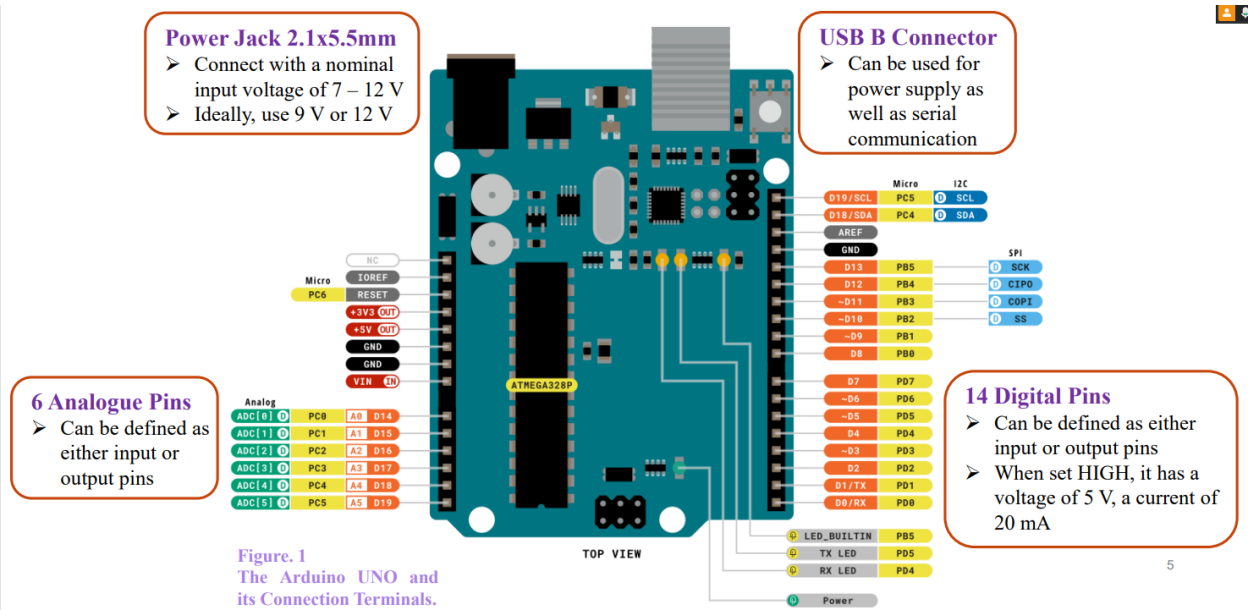

Figure. 1
The Arduino UNO and its Connection Terminals.

Coding, e.g. meanings of commonly used commands, variables, libraries

Commonly used Arduino commands, libraries in programming

setup(), execute only once, to initiate the important parameters, pins, set up serial communications, etc.

loop(), execute many many times, execute your main control programme

pinMode(),

pinMode(13, OUTPUT), set pin D13 as an output terminal

pinMode(13, INPUT), set pin D13 as an input terminal

digitalRead(),

digitalWrite(),

analogWrite(),

Serial.begin ·

Serial.begin(9600), 9600 is the baud rate

pulseIn ·

tone ·

millis

Programming | Arduino Documentation

Language Reference | Arduino Documentation

Sensors, review for their work principle, coding commands related

HC-SR04,

Trig signal, a high pulse of duration of 10 us

After the trig signal, the sensor emits a sound wave, which hits the wall, and reflect back

Echo signal, once the sound wave is reflected back, the sensor will generate this signal, to tell the controller the sound wave is reflected

The time duration in between the trig and echo, can be used to measure the distance.

Sensor I basics note, slides 8 – 14

Ultrasonic Sensor HC-SR04 and Arduino - Complete Guide

IR sensor,

Review your lab task notes, to understand fully the lab task which you have done

7-segment display,

common Anode 5611BH

https://www.robotsforfun.com/webpages/7-segment-anode.html

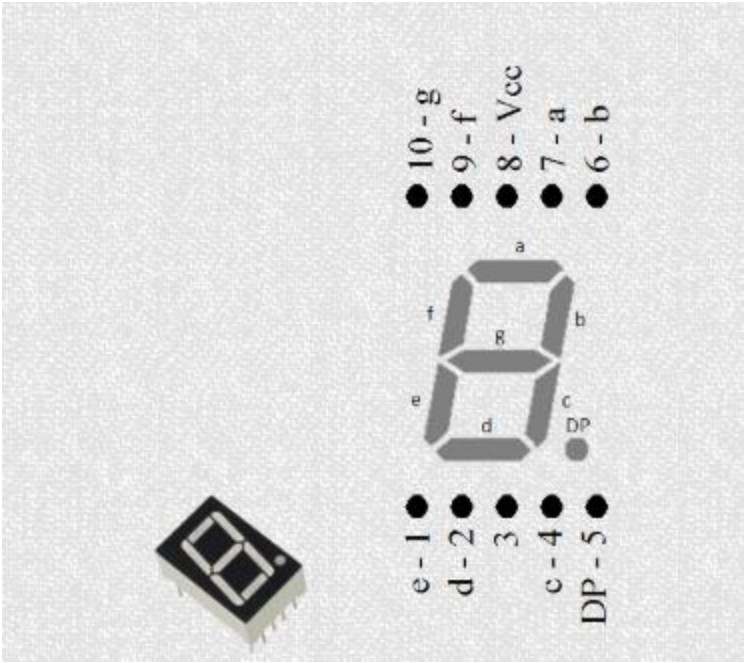

DP means decimal point

Digit 1 lights segments b and c

touch/stress input,

review the lab task notes carefully

SIG pin on the touch sensor is the output terminal

Pin 2 on Arduino is the digital input terminal.

ADXL345, **Accelerometer**

Communicate with Arduino with I2C (mainly) or SPI protocol

https://howtomechatronics.com/tutorials/arduino/how-to-track-orientation-with-arduino-and-adxl345-accelerometer/

output units may be written as m/s^2, or g

Our lab task, with a specific library for ADXL345, read outs are with the unit of m/s^2

1g = 9.8 m/s^2

In the “how to mechatronics” tutorial, the read outs in the unit of g

I2C communication,

Wiring, A4 to SDA; A5 to SCL

RFID

SPI communication,

Arduino SPI Tutorial: Master and Slave SPI Communication between two Arduino

Arduino & Serial Peripheral Interface (SPI) | Arduino Documentation

Communications, in between Arduino and typical load devices (e.g. sensors)

ADXL345 is often I2C or SPI

Serial Monitor corresponds to UART

UART, Universal Asynchronous Receiver-Transmitter (UART) | Arduino Documentation

A question, Serial.begin(9600), 9600: baud rate

Work principle of these communication methods will be tested

How to do the wiring, e.g. to realize I2C communication in between ADXL345 and Arduino.

Trouble shooting

Check p7 of the review notes

Use servo.h for control of servo motors

How to Control Servo Motors with Arduino - Complete Guide